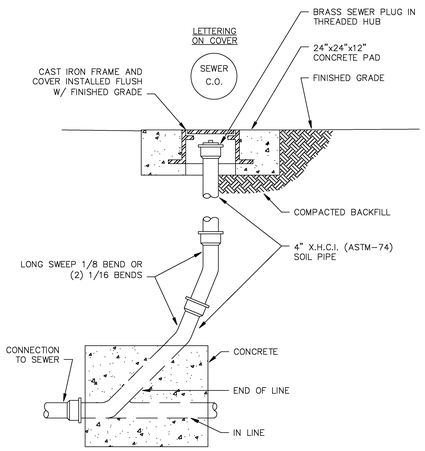

1 / P-501 GRADE CLEANOUT DETAIL
NTS

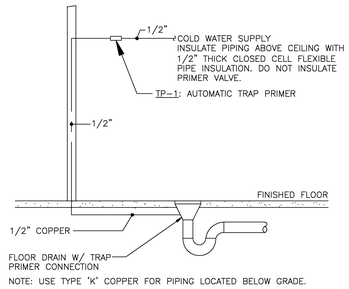

NOTE: USE TYPE 'K' COPPER FOR PIPING LOCATED BELOW GRADE.

2 / P-501 TRAP PRIMER DETAIL
NTS

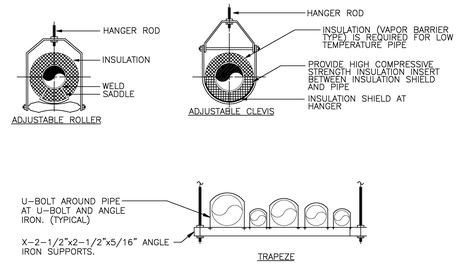

3 / P-501 PIPE HANGER DETAIL
NTS

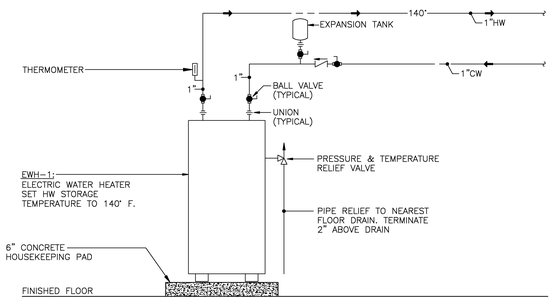

4 / P-501 ELECTRIC WATER HEATER DETAIL
NTS

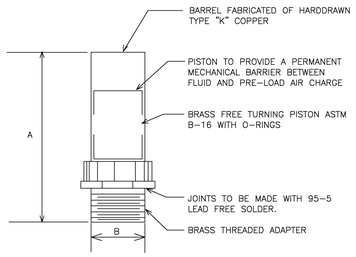

PIPE SIZE	P.D.I. SYMBOL	FIXTURE UNIT RATINGS	A DIM.	B DIM.
1/2"	A	1 – 11	5"	1/2"
3/4"	B	12 – 32	5"	3/4"
1"	C	33 – 60	7"	1"
1-1/4"	D	61 – 113	7"	1-1/4"
1-1/2"	E	114 – 154	9"	1-1/2"
2"	F	155 – 330	9"	2"

5 / P-501 SHOCK ABSORBER DETAIL
NTS

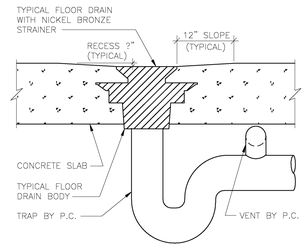

NOTE: P.C. COORDINATE SLOPING OF FLOOR WITH G.C.

6 / P-501 FLOOR DRAIN DETAIL
NTS

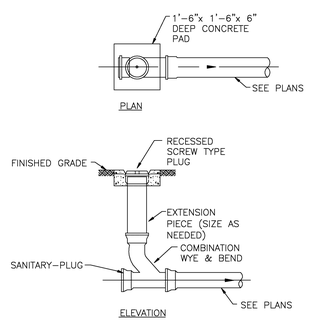

7 / P-501 FLOOR CLEANOUT DETAIL
NTS

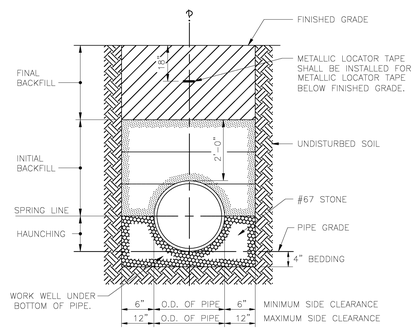

NOTES

1. FOR TRENCHES REQUIRING SHORING AND BRACING, DIMENSIONS SHALL BE TAKEN FROM THE INSIDE FACE OF THE SHORING AND BRACING.
2. NO ROCKS OR BOULDERS 4" OR LARGER TO BE USED IN INITIAL BACKFILL.
3. ALL BACKFILL MATERIAL SHALL BE SUITABLE NATIVE MATERIAL.
4. BACKFILL SHALL BE TAMPED IN 6" LAYERS IN TRAFFIC AREAS, 12" IN NON-TRAFFIC AREAS.

8 / P-501 TRENCHING DETAIL
NTS

GATES COUNTY

PUBLIC LIBRARY

LS3P ASSOCIATES LTD.
434 FAYETTEVILLE STREET SUITE 1700
RALEIGH, NORTH CAROLINA 27601
TEL. 919.829.2700 FAX 919.829.2730
WWW.LS3P.COM

SGE SOLUTIONS, PC
215 GLENWOOD AVENUE SUITE A
RALEIGH, NC 27603
PHONE: 919.821.3886
www.sgesolutions.com
NC CERTIFICATE OF LICENSURE C-2970
MECHANICAL • ELECTRICAL • PLUMBING

NORTH CAROLINA PROFESSIONAL ENGINEER SEAL 25345 VICTOR T. BIRD

DATE: 12.23.2011

MEMBERS OF THE AMERICAN INSTITUTE OF ARCHITECTS
COPYRIGHT 2011 ALL RIGHTS RESERVED PRINTED OR ELECTRONIC DRAWINGS AND DOCUMENTATION MAY NOT BE REPRODUCED IN ANY FORM WITHOUT WRITTEN PERMISSION FROM LS3P ASSOCIATES LTD.

REVISIONS:

No.	Description	Date

PROJECT: 11013
DATE: DECEMBER 23, 2011
DRAWN BY: BCL
CHECKED BY: VTB

PLUMBING DETAILS

P-501

SOLUTIONS THROUGH LISTENING
SERVICE BY DESIGN

FOR CONSTRUCTION