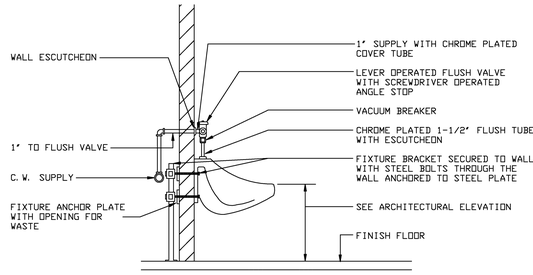

1 / P-601 URINAL INSTALLATION DETAIL
NTS

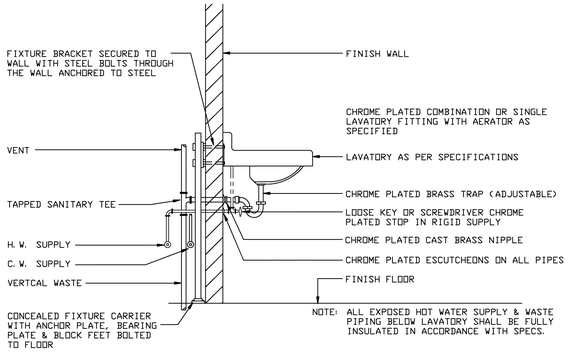

2 / P-601 LAVATORY INSTALLATION DETAIL
NTS

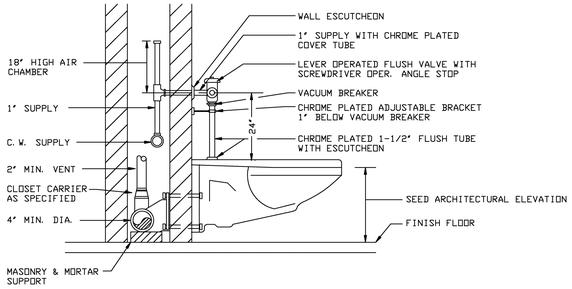

3 / P-601 WATER CLOSET INSTALLATION DETAIL
NTS

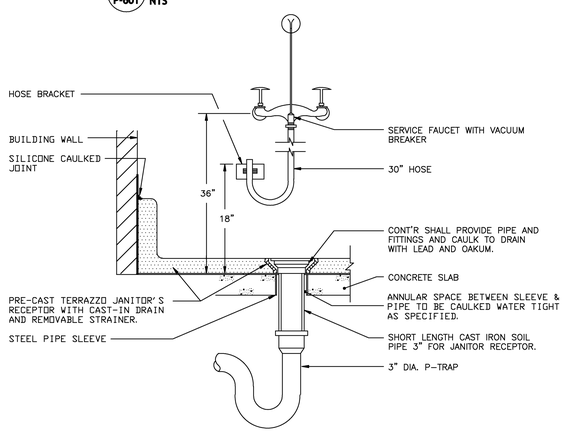

4 / P-601 MOP SINK INSTALLATION DETAIL
NTS

PLUMBING FIXTURE SCHEDULE

FIXTURE DESIG.	DESCRIPTION	MANUFACTURER	CATALOG NO.	SERVICE CONNECTION WASTE	VENT	HW	CW	NOTES
P-1	WALL HUNG FLUSH VALVE WATER CLOSET: TOP SPUD, ELONGATED, VITREOUS CHINA , ADA COMPLIANT, 1.6 GPF COLOR: WHITE FLUSH VALVE:SLOAN ROYAL FLUSHMETER MODEL 11-1.28, 1.28 GPF SEAT: HEAVY DUTY CENTOCO 1500STSCCSS (STAINLESS STEEL HINGE) AND CONCEALED TRAP PRIMER ELBOW FOR FLOOR DRAINS EQUAL TO ZURN P6000-TPE	KOHLER OR APPROVED EQUAL	KINGSTON K-4330	4"	2"		1"	
P-2	ADA WALL MOUNTED URINAL: TOP SPUD, VITREOUS CHINA, WITH WALL CARRIER COLOR: WHITE FLUSH VALVE: ZURN EXPOSED Z6003AV WITH ADA HANDLE, 1.0 GPF,	KOHLER OR APPROVED EQUAL	DEXTER K-5016-ET	2"	2"		3/4"	
P-3	LAVATORY AND ADA LAVATORY: SELF RIMMING ASSEMBLY, WITH OVERFLOW, VITREOUS CHINA COLOR: WHITE FAUCET: KOHLER CORALAIS K-15199 MCQUIRE #2165LK WALL SUPPLIES WITH LOOSE KEY ANGLE STOPS, OFFSET OPEN GRID STAINER AND MCQUIRE #8872 P-TRAP WITH NIPPLE TO WALL CAST BRASS SETSCREWESCUTCHEONS INSULATE EXPOSED WASTE AND WATER SUPPLIES WITH PVC MOLDED INSULATION, TRUEBRO INC. HANDI LAV-GUARD, CROCAR PRODUCTS TRAPWRAP	KOHLER OR APPROVED EQUAL	PENNINGTON K-2196	2"	1 1/2"	1/2"	1/2"	
P-4	ADA LAVATORY: WALL HUNG ASSEMBLY, WITH OVERFLOW, VITREOUS CHINA, WITH WALL CARRIER COLOR: WHITE FAUCET: KOHLER CORALAIS K-15199 WITH 4" CENTERS MCQUIRE #2165LK WALL SUPPLIES WITH LOOSE KEY ANGLE STOPS, OFFSET OPEN GRID STAINER AND MCQUIRE #8872 P-TRAP WITH NIPPLE TO WALL CAST BRASS SETSCREWESCUTCHEONS INSULATE EXPOSED WASTE AND WATER SUPPLIES WITH PVC MOLDED INSULATION LAVATORY PROTECTIVE ENCLOSURES: TRUEBRO INC. LAV-SHIELD 2018	KOHLER OR APPROVED EQUAL	KINGSTON K-2005	2"	1 1/2"	1/2"	1/2"	
P-5	ADA DOUBLE BOWL SINK: U-CHANNEL TYPE MOUNTING, SELF RIMMING, 18 GUAGE TYPE 304 STAINLESS STEEL, 4" CENTERS, UNDERSIDE FULLY COATED, 2 HOLES, EACH COMPARTMENT 13.5"X18"X8.5"D FAUCET: TRITON K-7776-K , RIGID SWIVEL GOOSENECK SPOUT, VANDEL RESISTANT AERATOR, 4" WRIST BLADES LK-18 GRID STRAINER, MCQUIRE # 2165 LK WALL SUPPLIES WITH LOOSE KEY ANGLE STOPS, CAST BRASS SET SCREWESCUTCHEONS, MCQUIRE #8912 CASE BRASS SWIVEL TRAP 1 1/2" X 1 1/2" X 17 GUAGE CLEANOUT PLUG AND CAST BRASS NIPPLE CONTINUOUS WASTE ASSEMBLY	ELKAY OR APPROVED EQUAL	LRAD3322	2"	1 1/2"	1/2"	1/2"	
P-6	ELECTRIC WATER COOLER: HEAVY DUTY WALL MOUNTED VANDAL RESISTANT BARRIER FREE, ADA BARRIER FREE ACCESS BI LEVEL, STAINLESS STEEL 14 GAUGE CABINET ABD BASIN, SINGLE UNIT REFRIGERATED, 370 WATTS, 4 AMPS,120V1PH, SINGLE BUTTON OPERATED, PROVIDE VIR ALL MOUNTING HARDWARE	ELKAY OR APPROVED EQUAL	VRCHDTL8SC	2"	1 1/2"		1/2"	
P-7	MOP SINK: FIAT RUGGED STONE 24" X 24" X 10" DEEP 1" WIDE SHOULDERS, PROVIDE WITH HEAVY DUTY STAINLESS STEEL WALL GUARD MG 2424 FAUCET: FIAT 830 AA WALL MOUNTED, VACUUM BREAKER, HOSE THREAD OUTLET WITH BUCKET HOOK, BUILT IN STOPS, TOP BRACE	FIAT OR APPROVED EQUAL	MSB-2424	3"	2"	1/2"	1/2"	
P-8	REFRIGERATOR/ICE MAKER BOX: 20 GUAGE STEEL ENCLOSURE, WHITE POWDER COAT, 1/4" TURN BALL VALVE	IPS/GUY GRAY OR APPROVED EQUAL	M1B1				1/2"	

Note:

WATER HEATER SCHEDULE

UNIT NUMBER	AREA SERVED	STORAGE (GALLON)	RECOVEREY 90 F RISE	ELECTRICAL DATA VOLT	PHASE	LOWER ELEMENT (WATTS)	UPPER ELEMENT (WATTS)	MANUFACTURER	MODEL
EWH-1	ENTIRE BUILDING	40	20	208	1	4500	4500	RHEEM	RHE PRO40-2

Notes:
1

PLUMBING FIXTURE CALCULATION

FIXTURE TYPE	QUANTITY	WASTE (DFU)	TOTAL WASTE	WATER SUPPLY (WSFU)	TOTAL WATER
WATER CLOSET - FLUSH VALVE	5	4	20	6	30
URINAL	1	2	2	5	5
LAVATORY	5	2	10	0.7	3.5
SINKS	2	2	4	4	8
MOP SINK	1	2	2	3	3
ELECTRICAL WATER COOLER	1	0.5	0.5	0.25	0.25
HOSE BIB	3	0	0	1	3
FLOOR DRAIN	3	2	6	0	0
TOTAL FIXTURE UNITS			44.5		52.75
DISTRIBUTION PIPE SIZE			4" @ 1/8" FALL		2" @ 58 GPM

DRAIN, CLEAN OUT,HYDRANT SCHEDULE

FIXTURE DESIG.	DESCRIPTION	FINISH	MANUFACTURER	CATALOG NO.	NOTES
WCO	WALL CLEAN OUT: CLEANOUT TEE WITH BRASS PLUG AND ROUND STAINLESS STEEL SECURED ACCESS COVER	STAINLESS STEEL	JR SMITH OR APPROVED EQUAL	4530	1
FCO	FLOOR CLEANOUT: CAST IRON FLOOR CLEANOUT WITH ADJUSTABLE BRASS TOP, BRASS PLUD AND ROUND SCORIATED COVER.	NICKEL BRASS	JR SMITH OR APPROVED EQUAL	4020	1
CO	GRADE CLEANOUT: SAME AS FCO EXCEPT FINISH SET IN 12"X12"X8" DEEP CONCRETE PAD	BRASS	JR SMITH OR APPROVED EQUAL	4020	
FD-1	4" FLOOR DRAIN: CAST IRON FLOOR DRAIN WITH FLANGE, INTERAL REVERSIBLE CLAMPING COLLAR, SEEPAGE OPENINGS AND ADJUSTABLE 6" DIAMETER STRAINER, PROVIDE 1/2" TRAP PRIMER CONNECTION AS INDICATED ON FLOOR PLANS	SATIN BRONZE	JR SMITH OR APPROVED EQUAL	2010-A	1
NFHB-1	NON FREEZE ANTI-SIPHON WALL HYDRANT WITH BRONZE CASING AND INTEGRAL BACKFLOW PREVENTER AND BRONZE LOCKABLE BOX	NICKEL BRONZE	WATTS OR APPROVED EQUAL	HY-725	
HB-1	HOSE BIB WITH ATMOSPHERIC VACUUM BREAKER, 1/2" FLANGED INLET WITH SCREWDRIVER SLOT, 3/4" OUTLET	NICKEL BRONZE	ZURN OR APPROVED EQUAL	Z-875L7	
TP	TRAP PRIMER: 1/2" AUTOMATIC, USE DU-H DISTRIBUTION UNIT FOR MORE THAN ONE DRAIN	N/A	PRIME RITE VALVE OR APPROVED EQUAL	PR-500	

Note:
1 PROVIDE VANDAL PROOF SCREWS ON ALL EXPOSED FITTINGS

GATES COUNTY

PUBLIC LIBRARY

LS3P ASSOCIATES LTD.
434 FAYETTEVILLE STREET SUITE 1700
RALEIGH, NORTH CAROLINA 27601
TEL. 919.829.2700 FAX 919.829.2730
WWW.LS3P.COM

SGE SOLUTIONS, PC
215 GLENWOOD AVENUE SUITE A
RALEIGH, NC 27603
PHONE: 919.821.3886
www.sgesolutions.com
NC CERTIFICATE OF LICENSURE# C-2978
MECHANICAL • ELECTRICAL •PLUMBING

NORTH CAROLINA PROFESSIONAL ENGINEER SEAL 25416 VICTOR T. BIRD

DATE: 12.23.2011

MEMBERS OF THE AMERICAN INSTITUTE OF ARCHITECTS
COPYRIGHT 2011 ALL RIGHTS RESERVED
PRINTED OR ELECTRONIC DRAWINGS AND DOCUMENTATION MAY NOT BE REPRODUCED IN ANY FORM WITHOUT WRITTEN PERMISSION FROM LS3P ASSOCIATES LTD.

REVISIONS:

No.	Description	Date

PROJECT: 11013
DATE: DECEMBER 23, 2011
DRAWN BY: BCL/VTB
CHECKED BY: VTB

PLUMBING SCHEDULES

P-601

SOLUTIONS THROUGH LISTENING
SERVICE BY DESIGN
FOR CONSTRUCTION