SPLIT SYSTEM HEAT PUMP SCHEDULE

CONDENSING UNIT										AIR HANDLER															
			ELECTRICAL DATA									ELECTRICAL HEAT DATA					FAN ELECTRICAL DATA								
UNIT NUMBER	AREA SERVED	COOLING CAPACITY	VOLT	PHASE	MCA	MOCP	MANUFACTURER	MODEL	SEER	UNIT NUMBER	TYPE	VOLT	PHASE	MCA	MOCP	KW	HP	VOLTS	PHASE	FLA	MANUFACTURER	MODEL	SUPPLY AIR CFM	OUTSIDE AIR CFM	NOTES
CU-1	ENTIRE BUILDING	20 TON	208	3	86.1	100	TRANE	TWA24E	10	AHU-1	VERTICAL	208	3	89.7	90	22.5	5	208	3	14.5	TRANE	TWE240	7860	2280	1,2,3,4,5

Notes:
1 PROVIDE A MOTOR RATED DISCONNECT AS PER NEC AND THE MANUFACTURERS WRITTEN INSTALLATIONS INSTRUCTIONS
2 PROVIDE UNITS WITH FACTORY REFRIGERANT PIPING KIT, FILTER DRIER, AND SIGHT GLASS
3 PROVIDE UNITS WITH LOW AMBIENT START
4 PROVIDE WITH A VARI-TRAC CENTRAL CONTROL PANEL LOCATED WITHIN THE SPACE AND CONNECTED TO ALL VVT ZONE DAMPERS AND ECONOMIZER CONTROLS
5 PROVIDE UNIT WITH FILTER AND FILTER RACK

DUCTLESS SPLIT SYSTEM AIR CONDITIONING UNIT SCHEDULE

INDOOR UNIT												OUTDOOR CONDENSING UNIT							
		DX COOLING/HEATING				ELECTRICAL DATA							ELECTRICAL DATA						
UNIT NUMBER	AREA SERVED	CFM	COOLING BTH/HR	HEATING BTU/HR	ELECTRIC HEAT KW	VOLT	PHASE	MCA	MOCP	MANUFACTURER	MODEL	UNIT NUMBER	VOLT	PHASE	MCA	MOCP	MANUFACTURER	MODEL	NOTES
DMSS-1	TELECOM 126	400	9,000	8,600	3	208	1	16.7	20	EMI	WLHG-9	CUSS-1	208	1	5.7	15	EMI	S1HG9	1,2,3

Notes:
1 PROVIDE A MOTOR RATED DISCONNECT AS PER NEC AND THE MANUFACTURERS WRITTEN INSTALLATIONS INSTRUCTIONS
2 PROVIDE UNIT WITH ANTI FORST CONTROLS, CONDENSATE PUMP, LOW AMBIENT CONTROL, AND PREINSULATED TUBE KIT
3 PROVIDE A 365/7 DAY PROGRAMABLE THERMOSTAT WITH A LOCKABLE PLASTIC COVER

AIR DISTRIBUTION SCHEDULE

TAG	SERVICE	DESCRIPTION	FACE SIZE	NECK SIZE	COLOR	MATERIAL	MANUFACTURER	MODEL	NOTES
A	SUPPLY	LOUVERED FACE, 4 WAY BLOW WITH OPPOSED BLADE DAMPER	24 X 24	PER PLAN	WHITE	ALUMINUM	TITUS	TMSA	1
B	SUPPLY	LOUVERED FACE, 4 WAY BLOW WITH OPPOSED BLADE DAMPER	12 X 12	PER PLAN	WHITE	ALUMINUM	TITUS	TMSA	1
C	SUPPLY	ALUMINUM DRUM LOUVER	18 X 6	PER PLAN	ALUMINUM	ALUMINUM	TITUS	DL	1,2
D	RETURN	ALUMINUM EGGCRATE 1/2"X1/2" CUBES	30 X 18	PER PLAN	ALUMINUM	ALUMINUM	TITUS	50F	1,2
E	EXHAUST	EGGCRATE 1/2" X1/2" CUBES	24 X 12	PER PLAN	WHITE	ALUMINUM	TITUS	50F	1
F	TRANSFER	EGGCRATE 1/2" X1/2" CUBES	24 X 24	PER PLAN	WHITE	ALUMINUM	TITUS	50F	1

Notes:
1 SEE PLANS FOR CFM AND NECK SIZE AND MOUNTING/CEILING TYPE SEE ARCHITECTURAL RCP, PROVIDE ALL MOUNTING HARDWARE FOR EACH DEVICE
2 PROVIDE ALL MOUNTING HARDWARE FOR SIDEWALL APPLICATION

EXHAUST FAN SCHEDULE

UNIT NUMBER	AREA SERVED	TYPE	CFM	TOTAL SP IN . H20	FAN RPM	ELECTRICAL DATA VOLT	PHASE	HZ	HP	MANUFACTURER	MODEL	NOTES
EF-1	RESTROOM	ROOF MOUNTED	600	0.3	1560	120	1	60	1/20	COOK	AQD-1215AQ	1,2

Notes:
1 PROVIDE A MOTOR RATED DISCONNECT AS PER NEC AND THE MANUFACTURERS WRITTEN INSTALLATIONS INSTRUCTIONS
2 PROVIDE A FACTORY ROOF CURB AND BACKDRAFT DAMPER.

ELECTRIC UNIT HEATER SCHEDULE

UNIT NUMBER	AREA SERVED	TYPE	CFM	TEMP RISE F	ELECTRICAL DATA VOLT	PHASE	HZ	KW	MANUFACTURER	MODEL	NOTES
EUH-1	MECHANICAL ROOM 127	WALL MOUNT	575	42	208	3	60	7.5	MARKEL	F3FUH07CC03	1,2,3

Notes:
1 PROVIDE A MOTOR RATED DISCONNECT AS PER NEC AND THE MANUFACTURERS WRITTEN INSTALLATIONS INSTRUCTIONS
2 PROVIDE INTEGRAL USER ADJUSTABLE THERMOSTAT
3 PROVIDE WALL MOUNTED BRACKET FROM FACTORY

GRAVITY RELIEF VENT SCHEDULE

TAG	CFM	MAX SP	INLET DIA	MATERIAL	MANUFACTURER	MODEL	NOTES
RV-1	1280	0.1	16	ALUMNUM	GREENHECK	GRSR-16	1,2

Notes:
1 PROVIDE WITH INTERGRAL BIRD SCREEN
2 PAINT TO MATCH ROOF COLOR, COLOR SHALL BE APPROVED BY ARCHITECT

VARIABLE VOLUME TERMINAL UNIT SCHEDULE

UNIT NUMBER	MAXIMUM CFM	MINIMUM CFM	MANUFACTURER	MODEL	SIZE
VVT-1	750	350	TRANE	VARITRAC	12
VVT-2	1,500	500	TRANE	VARITRAC	14
VVT-3	1,960	1000	TRANE	VARITRAC	16
VVT-4	800	400	TRANE	VARITRAC	12
VVT-5	1,000	500	TRANE	VARITRAC	12
VVT-6	1,850	1000	TRANE	VARITRAC	16
BVT-1	2,055	0	TRANE	VARITRAC	16
BVT-2	2,055	0	TRANE	VARITRAC	16

Notes:
1.. PROVIDE WITH UNIT CONTROL MODULES AND A CENTRALY LOCATED CONTROL PANEL

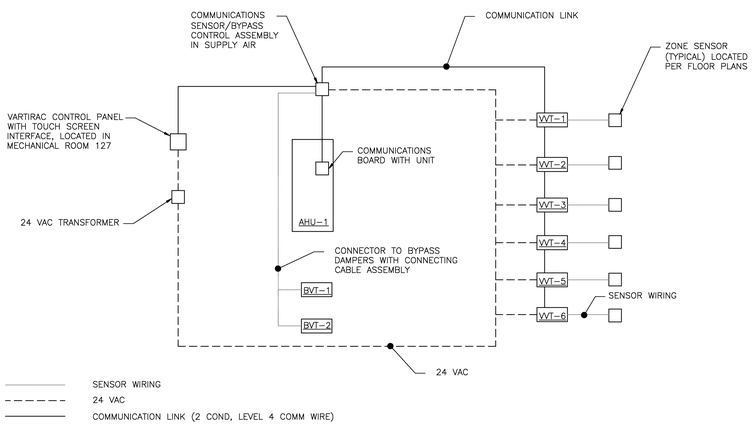

1 / M-601 **VARIABLE VOLUME CONTROL SCHEMATIC**
NTS

GATES COUNTY

PUBLIC LIBRARY

LS3P ASSOCIATES LTD.
434 FAYETTEVILLE STREET SUITE 1700
RALEIGH, NORTH CAROLINA 27601
TEL. 919.829.2700 FAX 919.829.2730
WWW.LS3P.COM

SGE SOLUTIONS, PC
215 GLENWOOD AVENUE SUITE A
RALEIGH, NC 27603
PHONE: 919.821.3886
www.sgesolutions.com
NC CERTIFICATE OF LICENSURE# C-2978
MECHANICAL • ELECTRICAL • PLUMBING

NORTH CAROLINA PROFESSIONAL SEAL ENGINEER VICTOR T. BIRD

DATE: 12.23.2011

MEMBERS OF THE AMERICAN INSTITUTE OF ARCHITECTS
COPYRIGHT 2011 ALL RIGHTS RESERVED
PRINTED OR ELECTRONIC DRAWINGS AND DOCUMENTATION MAY NOT BE REPRODUCED IN ANY FORM WITHOUT WRITTEN PERMISSION FROM LS3P ASSOCIATES LTD.

REVISIONS:

No.	Description	Date

PROJECT: 11013
DATE: DECEMBER 23, 2011
DRAWN BY: BCL/VTB
CHECKED BY: VTB

MECHANICAL SCHEDULES

M-601

SOLUTIONS THROUGH LISTENING
SERVICE BY DESIGN
FOR CONSTRUCTION